Megacity Iron Private Limited

AN ISO 9001:2001 COMPANY

Corporate Brochure

We are an **ISO 9001:2000 Co.** with the metallurgical experience since 1965. Manufacturer and exporter of superior quality cast iron products, industrial cast iron products such as manhole cover, gratings and kerb gullies.

Developed by IndiaMART InterMESH Limited

MEMBER indiamart.com

Megacity Iron Private Limited
AN ISO 9001:2001 COMPANY

- About Us -

Established in the year **1965**, and incorporated in the year **2002**, we are an **ISO 9001:2001** certified organization, engaged in manufacturing and exporting a wide range of sanitary, water engineering & telecom products. Our range include manhole cover & frames, grating & kerb gullies, water engineering & telecom products. Located at Kolkata, West Bengal, we are led by **"Mr. T. L. Bhowmic,"** who has in-depth industry knowledge and guides us in our entire business operations. To support him, we also have a dedicated and skilled team who fabricate the range as per the requirement of our customers. In addition, we also have a well equipped manufacturing unit, enabling us to provide good finish, fettling, grinding, machining and arrangements for protective coating on our range. This has helped us to meet the emerging challenges in the national and international markets.

We also make casting to meet specific requirement of each customer which would be either standard requirement or taylor made requirement for specific need. Megacity specializes in casting required for modern construction industries and infrastructures, like water management, waste water management, sewerage, strom water, soil and rain pipelines, valves, fire and gas hydrant etc. Our customers span across various departments of construction houses, water engineering departments, municipalities, road construction department, city councils, telecom companies, railways and other industries also. we are presently exporting our products to **USA, CANADA, UAE, QATAR, SAUDI and U.K** and also widely to our own countries government and private companies.

Developed by IndiaMART InterMESH Limited

MEMBER indiamart.com

Megacity Iron Private Limited
AN ISO 9001:2001 COMPANY

Manhole Covers:

Our products are compliant to various taylor made requirements. Our metallurgy is based on **IS, BS-497176, BS-EN-124, DIN and ASTM**. Features of manhole covers are double and single triangular cover, single seal and double seal cover, plain seated cover, pressure tight cover, recessed cover, ventilated cover, slide out cover, safety guard cover and meter reinforced cover, hood type cover.

Manhole Frames

Iron Manhole Cover

Water Tight Manhole Cover

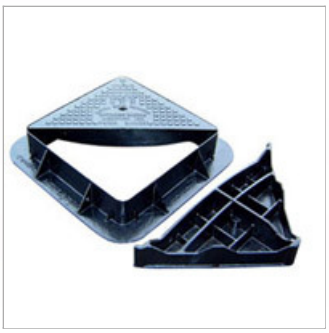

Double Triangular Manhole Cover

Developed by IndiaMART InterMESH Limited

MEMBER indiamart.com

Grating & Kerb Gullies:

It must be remembered that the efficiency of a drainage depends not only upon the water way of the grating profile and the intermediate passage way but also upon the size/ design of the outlet. As with manhole covers, those gratings that will be subjected to fast moving heavy traffic should be of non-rocking design.

Iron Gratings

Light Gratings

Sewage Grating

Square Gratings

Water Engineering & Telecom:

Surface boxes are installed over a valve chamber and offered in grey iron in accordance with BS. Minimum clear opening sizes 100mm, 135mm, 225mm and 300mm are included in the grade. A heavy duty category where units may be hinged, must incorporate a non rock design of size 225mm & 330mm.

Entry Cesspit

Hydrant Cover

Channel Grating

Ductile Iron Box

Valve Box & Pipe Fittings:

We manufacture valve boxes that provides for an easy solution to managing water supplies and systems within cities. Our valve boxes have greater flexibility with regards to adjust large number of pipes within the valve box. Our valve boxes have reduced installation time enhancing speed of operation and effectiveness.

Valve Box

Round Valve Box

Rectangular Valve Box

Surface Box Valve

Main Hole Accessories:

we manufacture miscellaneous other items also like cast iron hood, uvx etc. These miscellaneous products are also easy to install and are made using premium quality raw materials. Our miscellaneous products find wide usage in different industries and are also sturdy as well as durable.

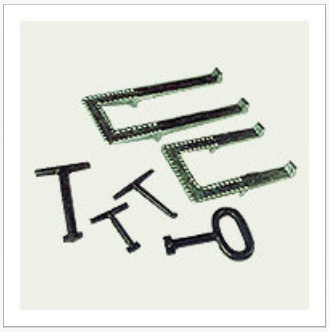

Lifting Keys & Hooks

Iron Manhole Cover

Cast Iron Hood

UVX Manhole Cover

Industrial Pipes:

We are manufacturing, exporting and supplying of socket soils, waste and vantilating pipes and fitting accessories.

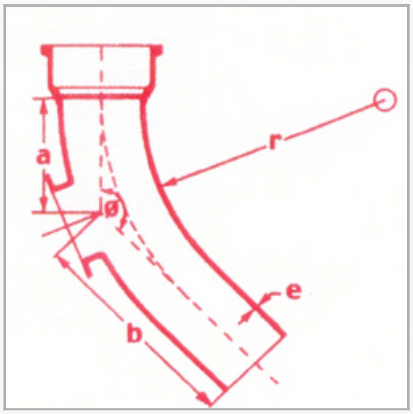

Socket Soil

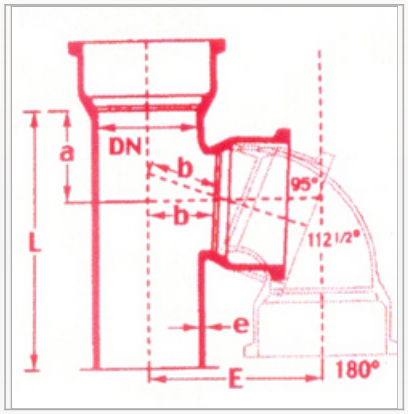

Fitting & Accessorise

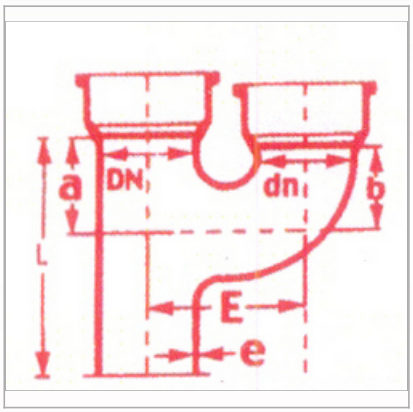

Waste and Ventilating Pipes

Other Products:

Tank Cover

Sewer Cover

Recessed Cover

Channel Gratings

Megacity Iron Private Limited
AN ISO 9001:2001 COMPANY

Other Products:

Channel Gratings With Surface Box

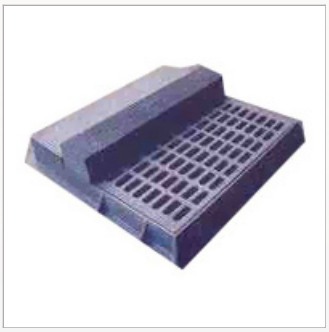

Catch Basin

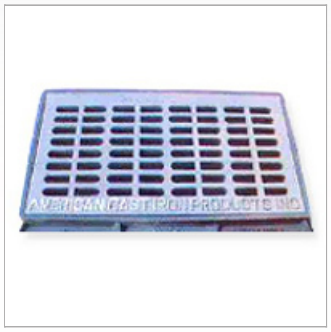

Kerb Gullies

Cast Iron Valves

Developed by IndiaMART InterMESH Limited

MEMBER indiamart.com

Megacity Iron
Private Limited
AN ISO 9001:2001 COMPANY

- Company Factsheet -

Year of Establishment	2002
Nature of Business	· Manufacturer · Exporter
Total Number of Employees	101 to 500 People
Turnover	US$ 1-10 Million (or Rs. 4-40 Crore Approx.)
Major Markets	· Indian Subcontinent · North Europe · Middle East · North America
Primary Competitive Advantage	· Experienced R & D Department · Good Financial Position & TQM · Large Product Line · Large Production Capacity · Provide Customized Solutions

Developed by IndiaMART InterMESH Limited

MEMBER indiamart.com

Megacity Iron
Private Limited
AN ISO 9001:2001 COMPANY

Contact Details:

Megacity Iron Private Limited
Mr. T. R. Bhowmick
No. 11-A, Charu Avenue
Kolkata, West Bengal - 700 033, India
Website: www.indiamart.com/megacityiron

Developed by IndiaMART InterMESH Limited
MEMBER indiamart.com